QNAP

NAS
Quick Installation Guide

快速安裝手冊 빠른 설치 설명서 Guía de Instalación Rápida
クイックインストールガイド Hızlı Kurulum Kılavuzu
คู่มือการติดตั้งแบบเร็ว Gyors telepítési útmutató
Instrukcja szybkiej instalacji Průvodce rychlou in
Kurzinstallationsanleitung 快速安装指南
Guida di installazione rapida Pika-
Краткое руководство по установ
Snabbinstallationsguide
Guia de Instalação Rápida
Hurtiginstallasjonsveiledning
Hurtig installationsvejledning
Pika-asennusopas Installatiegids
Snelle Installatiegids

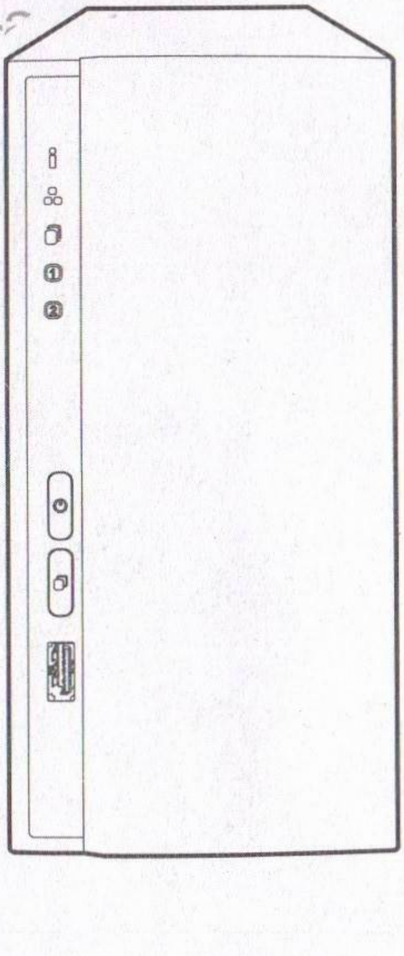

www.qnap.com

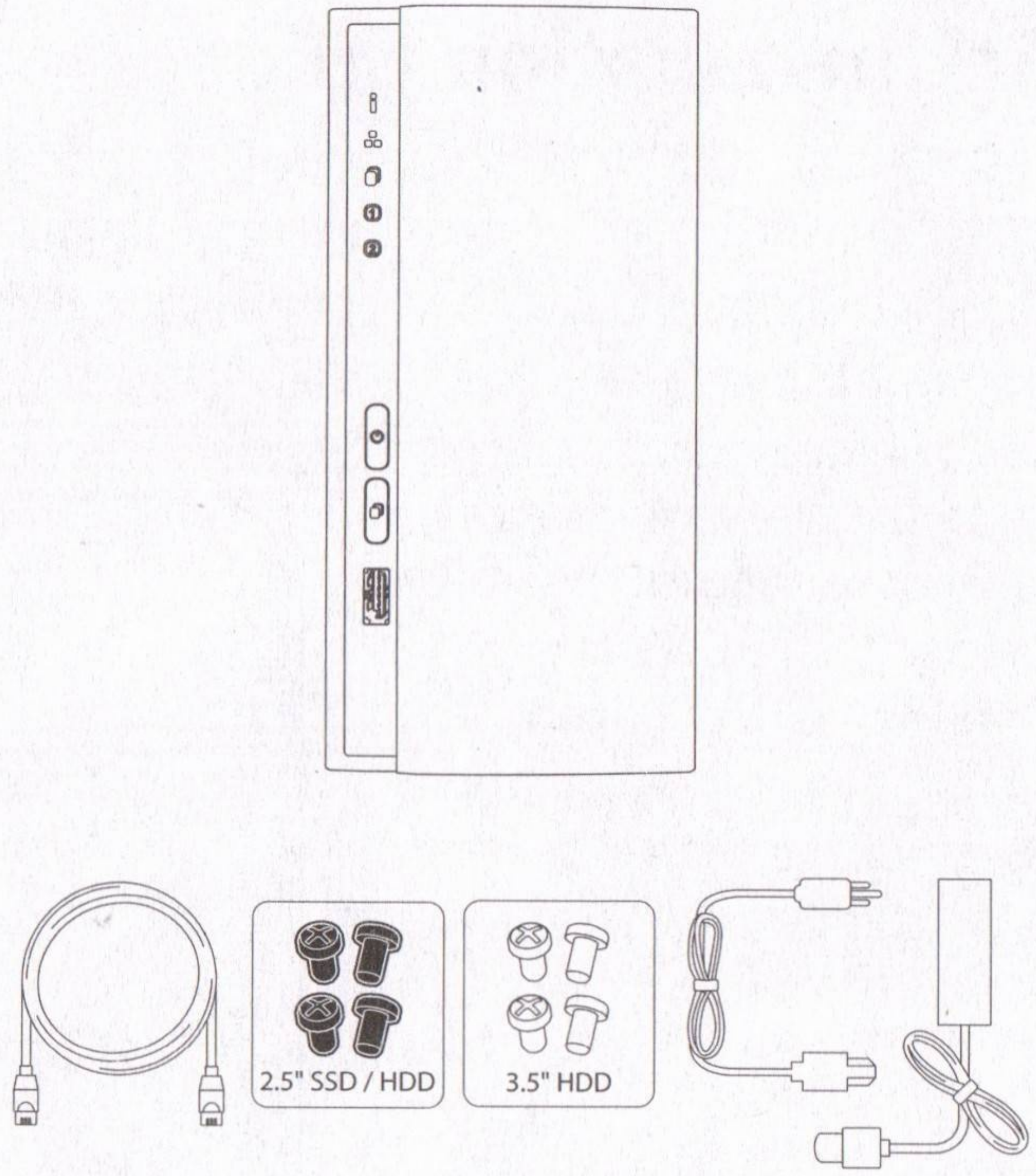
2.5" SSD / HDD
3.5" HDD

HDD

http://www.qnap.com/compatibility

All the drive data will be cleared upon HDD initialization — en
Alle Laufwerksdaten werden bei der HDD-Initialisierung gelöscht — de
Toutes les données présentes sur le disque seront effacées lors de l'initialisation du HDD — fr
Tutti dati dell'unità saranno cancellati con l'inizializzazione del disco rigido — it
Todos los datos del disco se borrarán después de la inicialización del HDD — es
Als de HDD wordt geïnitialiseerd, dan worden alle gegevens erop gewist — nl
Alla data på disken rensas när HDD initieras — sv
Kaikki aseman tiedot tyhjennetään kiintolevyn alustuksen yhteydessä — fi
Alle data på disken ryddes, når harddisken initialiseres — da
Alle data blir slettet når HDD initialiseres — no
Todos os dados do disco serão apagados na inicialização do HDD — pt
После инициализации жесткого диска все данные на нем будут очищены — ru
硬碟初始化時・所有資料皆會被清除 — zh
HDD 初始化时・所有磁盘上的数据都将会被清除 — cn
HDDを初期化すると、すべてのドライブデータが消去されます — ja
HDD 초기화시 모든 드라이브 데이터가 삭제됩니다 — ko
ข้อมูลทั้งหมดในไดรฟ์จะถูกล้าง เมื่อเตรียมใช้งาน HDD — th
HDD başlatıldıktan sonra tüm sürücü verileri temizlenecektir — tr
A HDD inicializálása a meghajtó összes adatát törli — hu
Všechna data disku budou při inicializaci jednotky pevného disku odstraněna — cs
Po zainicjowaniu dysku twardego wszystkie znajdujące się na nim dane zostaną usunięte — pl
يتم مسح كل بيانات محرك الأقراص عند تهيئة HDD (محرك الأقراص الصلبة) — ar

01

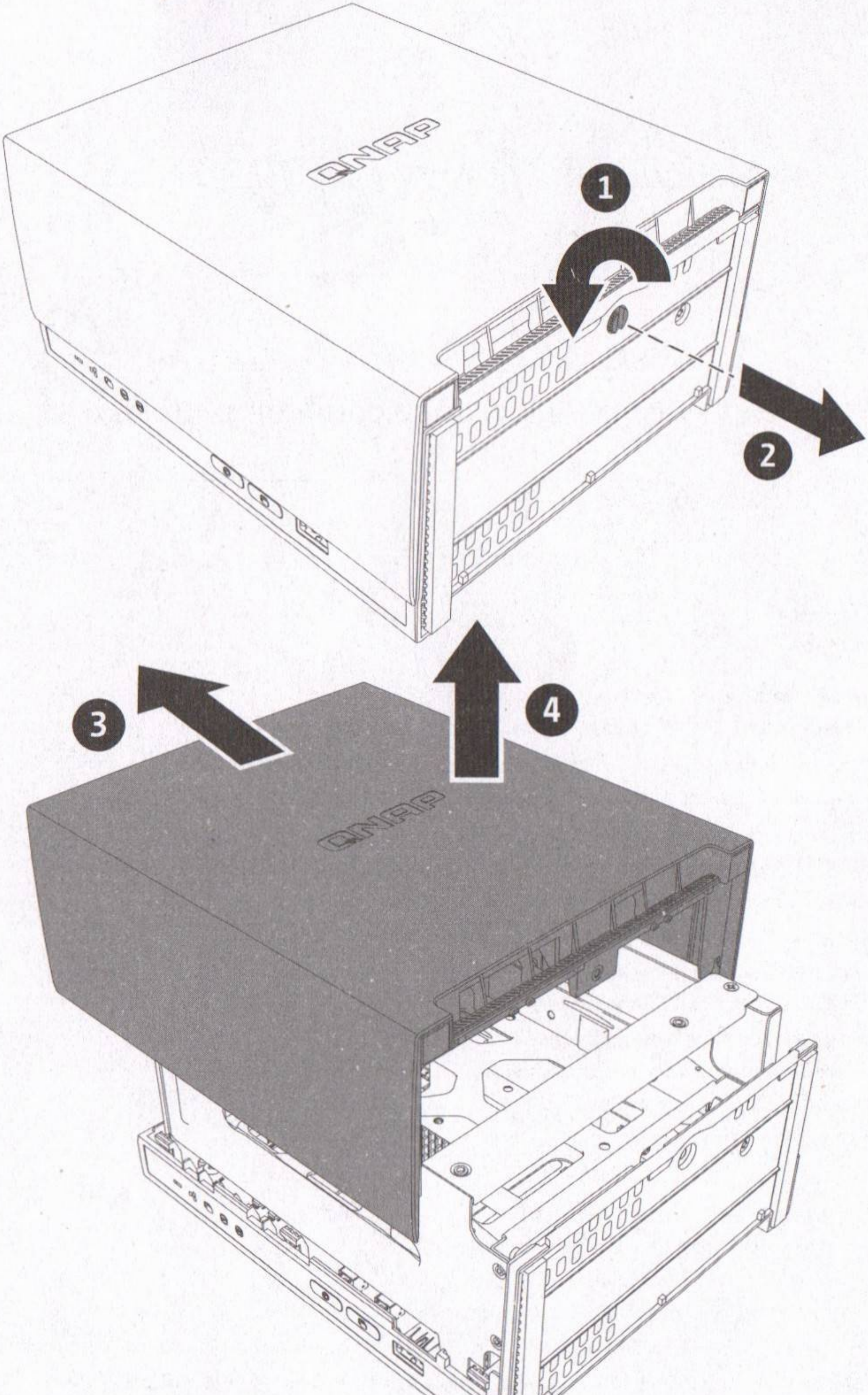

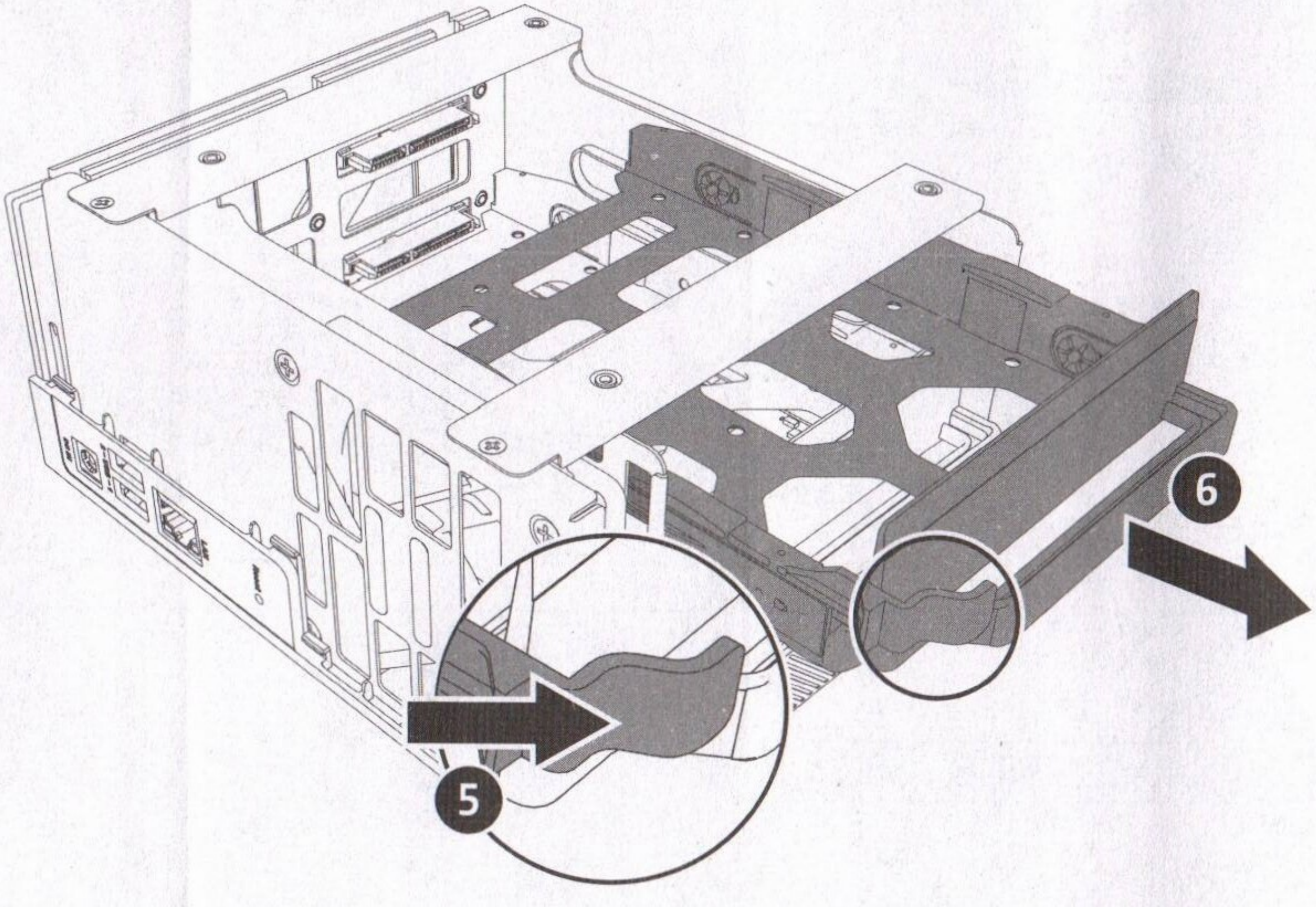

6
5

02

3.5" HDD

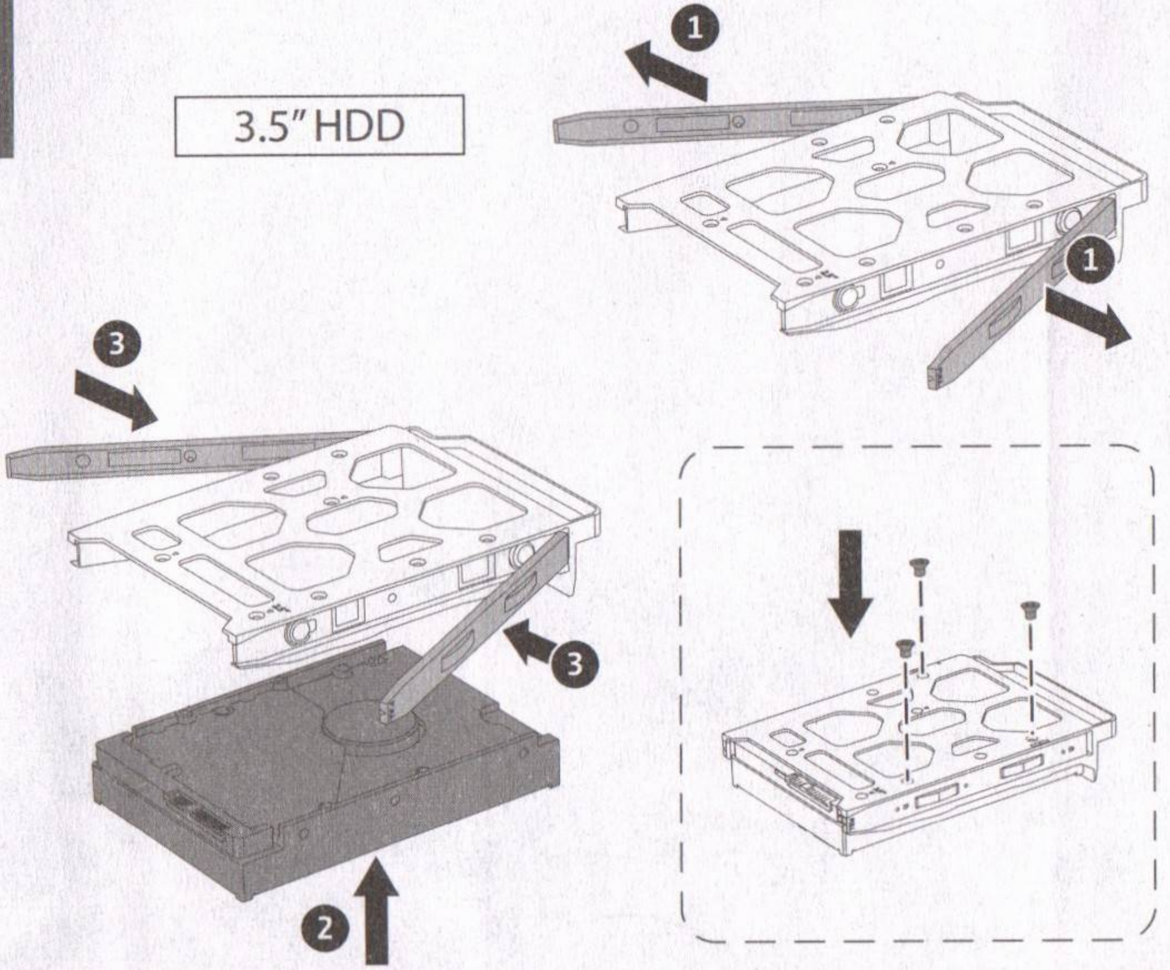

2.5" HDD / SSD

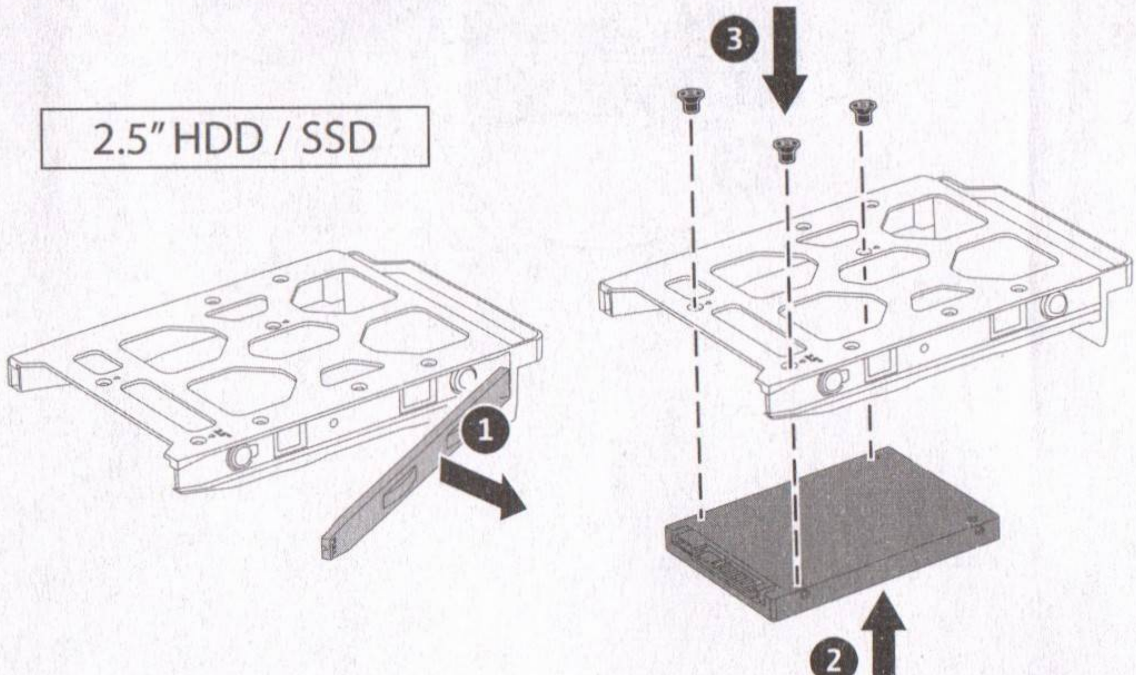

03

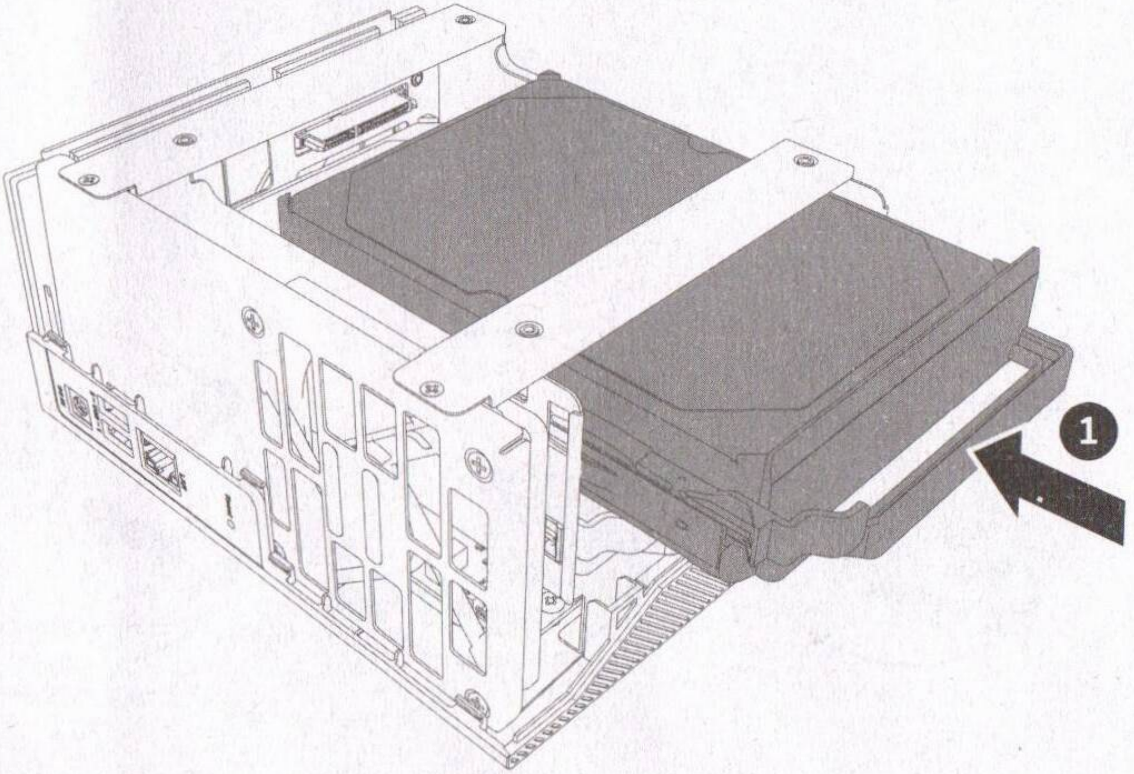

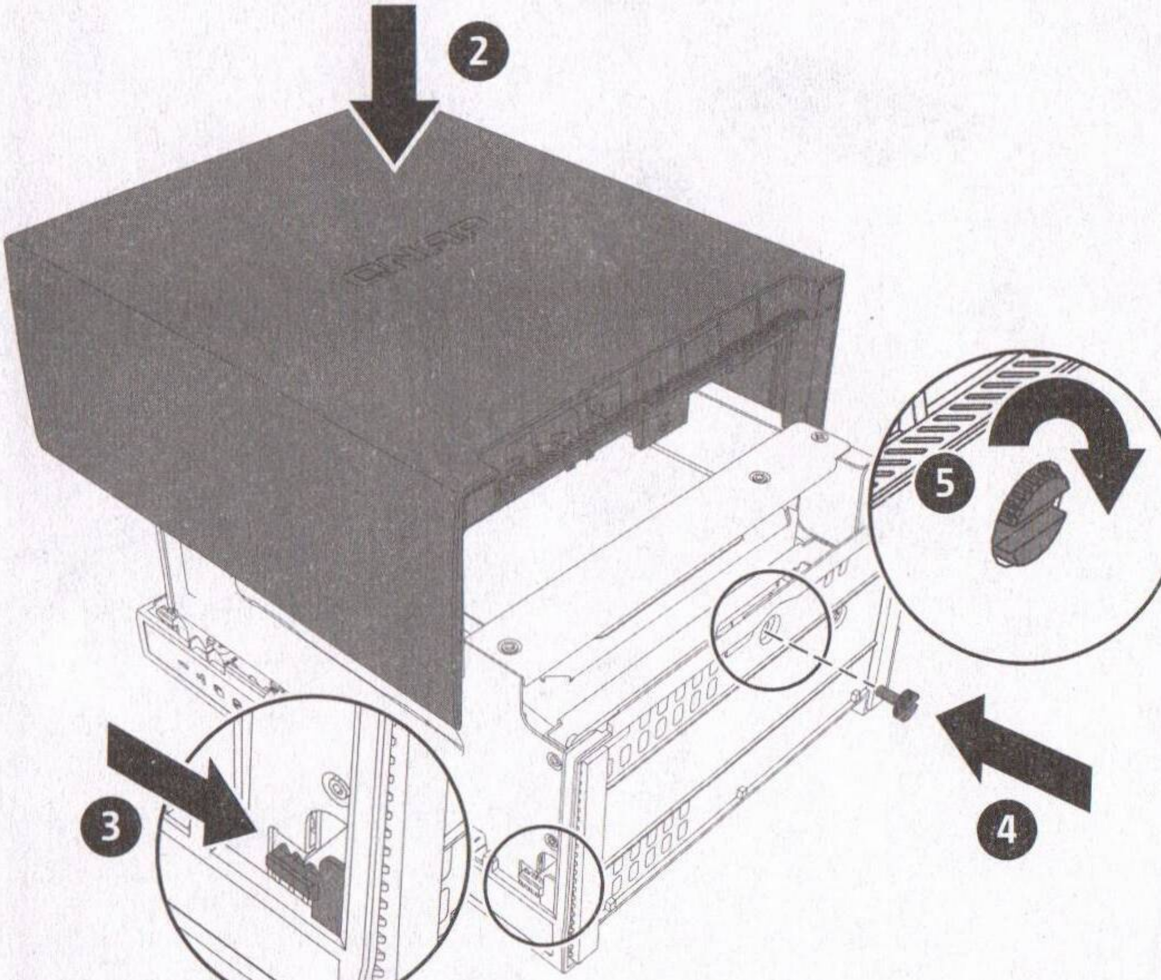

04

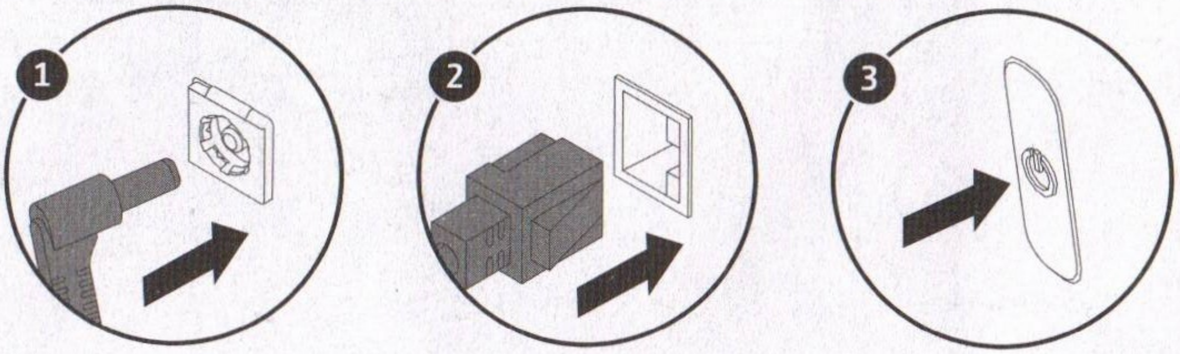

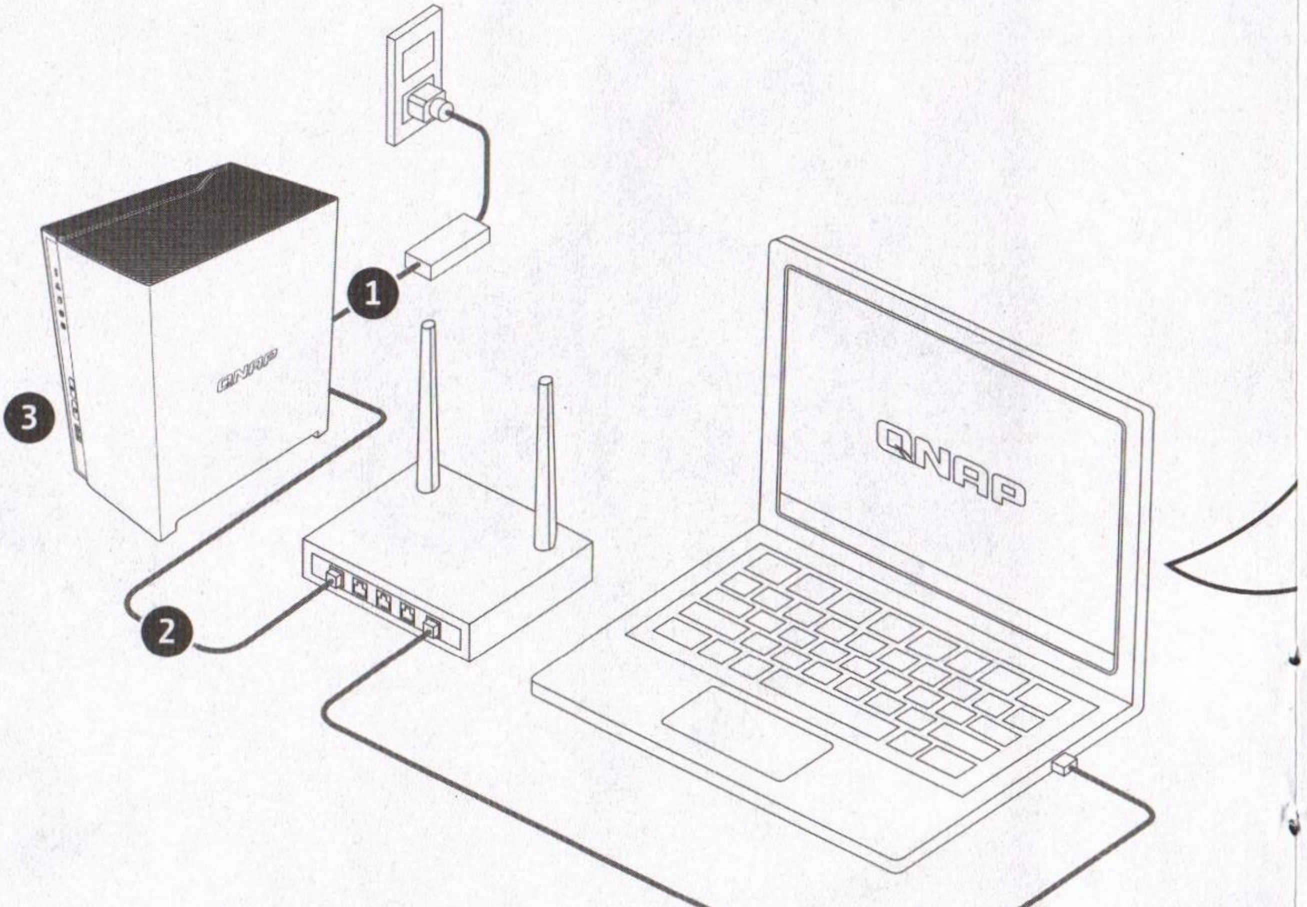

a

Qfinder Pro | Windows | Mac | Linux

http://www.qnap.com/qfinderpro

b

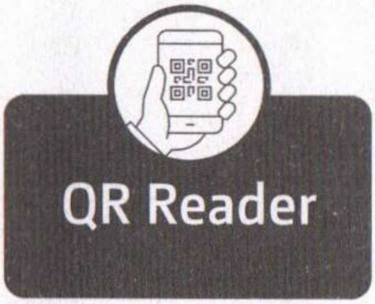

-Cloud Key:
Q53843601
-S/N:
QXKMV04351N
-MAC1:
245EBE71204C

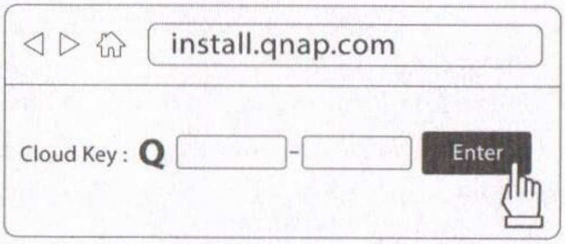

Download Center

www.qnap.com/download

Visit Download Center for our full guides and utilities. - en
Unsere vollständigen Handbücher und Dienstprogramme finden Sie im Download Center. - - - - - - - - - - de
Visitez le Centre de téléchargement pour accéder à nos guides et utilitaires complets. - - - - - - - - - - fr
Per le guide e le utilità complete, visitare il Centro download. - - - - - - - - - - - - - - - - - - it
Visite el Centro de descargas para ver todas nuestras guías y utilidades. - - - - - - - - - - - - - - es
Bezoek het downloadcentrum voor onze uitgebreide gidsen en hulpprogramma's. - - - - - - - - - - - - nl
Besök Nedladdningscenter för våra fullständiga guider och verktyg. - - - - - - - - - - - - - - - - - sv
Katso täydelliset oppaat ja apuohjelmat latauskeskuksestamme. - - - - - - - - - - - - - - - - - - - fi
Besøg Downloadcenter for at se alle vores vejledninger og hjælpeværktøjer. - - - - - - - - - - - - - da
Gå til Nedlastingssenter for fullstendige veiledninger og verktøy. - - - - - - - - - - - - - - - - - no
Visite a Central de Download para acessar nossos guias e utilitários completos. - - - - - - - - - - - pt
Чтобы ознакомиться с полным набором руководств и служебных программ, посетите Центр загрузки. - - - ru
請前往下載中心取得完整指南和應用工具。 - tw
有关完整指南和实用工具，请访问 “下载中心” 。 - cn
完全なガイドとユーティリティについては、ダウンロードセンターをご覧ください。 - - - - - - - - - - - ja
다운로드 센터에서 전체 지침 및 유틸리티를 확인하십시오 . - ko
กรุณาเข้าศูนย์การดาวน์โหลดเพื่อดาวน์โหลดคู่มือฉบับสมบูรณ์และโปรแกรมอรรถประโยชน์ต่างๆ - - - - - - - - th
Tam kılavuzumuz ve yardımcı hizmetlerimiz için İndirme Merkezi'ni ziyaret edin. - - - - - - - - - - - - tr
A teljes útmutatók és segédprogramok megtekintéséhez keresse fel a Letöltési központot. - - - - - - - - hu
Kompletního průvodce a nástroje najdete na webu Centrum stahování. - - - - - - - - - - - - - - - - - cs
Odwiedź Centrum pobierania, aby uzyskać kompletne przewodniki i narzędzia. - - - - - - - - - - - - - pl
تفضل بزيارة مركز التنزيل للحصول على الأدلة والأدوات المساعدة الكاملة. - - - - - - - - - - - - - - - - ar

This device complies with Part 15 of the FCC Rules. Operation is subject to the following two conditions:

1. This device may not cause harmful interference.
2. This device must accept any interference received, including interference that may cause undesired operation.

FCC Class B Notice:
This equipment has been tested and found to comply with the limits for a Class B digital device, pursuant to Part 15 of the FCC Rules. These limits are designed to provide reasonable protection against harmful interference in a residential installation. This equipment generates, uses, and can radiate radio frequency energy and, if not installed and used in accordance with the instructions, may cause harmful interference to radio communications. However, there is no guarantee that interference will not occur in a particular installation. If this equipment does cause harmful interference to radio or television reception, which can be determined by turning the equipment off and on, the user is encouraged to try to correct the interference by one or more of the following measures:

- Reorient or relocate the receiving antenna.
- Increase the separation between the equipment and receiver.
- Connect the equipment into an outlet on a circuit different from that to which the receiver is connected.
- Consult the dealer or an experienced radio/television technician for help.

Modifications:
Any modifications made to this device that are not approved by QNAP Systems, Inc. may void the authority granted to the user by the FCC to operate this equipment.

This QNAP NAS complies with CE Compliance Class B.

According to the requirement of the WEEE legislation the following user information is provided to customers for all branded QNAP products subject to the WEEE directive.

This symbol on the product or on its packaging indicates that this product must not be disposed of with your other household waste. Instead, it is your responsibility to dispose of your waste equipment by handing it over to a designated collection point for the recycling of waste electrical and electronic equipment. The separate collection and recycling of your waste equipment at the time of disposal will help to conserve natural resources and ensure that it is recycled in a manner that protects human health and the environment. For more information about where you can drop off your waste equipment for recycling, please contact your local city office, your household waste disposal service or the shop where you purchased the product.

Office in EU;
QNAP GmbH,
Linsellesstrasse 109
47877 Willich, Germany

Office in UK;
QNAP Ltd,
2 Drakes Meadow, Swindon SN3 3LL
United Kingdom

This device complies with the UKCA requirements for products sold in Great Britain.

更多關於安全、法規，與環境法令遵循相關的資訊，請參閱以下網址 www.qnap.com/regulatory/。

D33B77
RoHS

※付属の電源コードは当該製品専用です。他の機器に使用しないでください。

install.qnap.com

service.qnap.com

download.qnap.com

Printed in Taiwan

51000-025042-HF